SSM-A / Shouldering 2 x 90°

Insert (APKT / APHT 16)

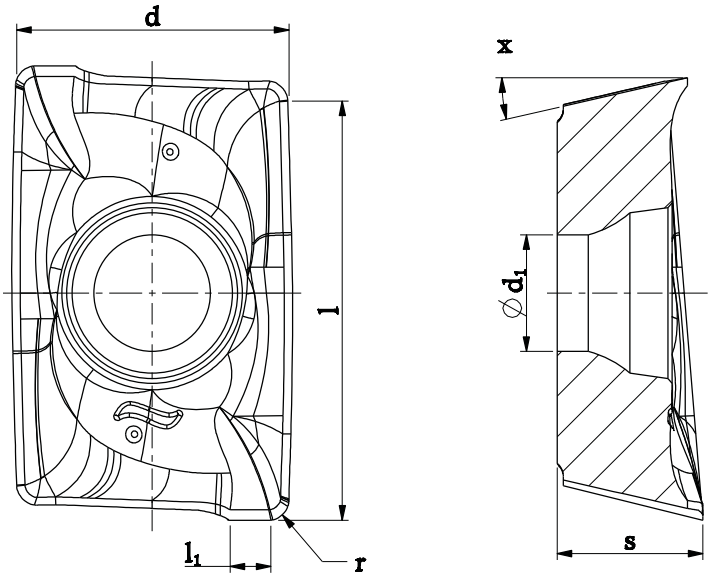

Description	d [mm]	l [mm]	s [mm]	l_1 [mm]	r [mm]	d_1 [mm]	x [°]
APKT 1604PDER-HCM	9.5	15.3	5.25	1.4	0.85	4.4	11.5
APKT 1604PDER-SCM	9.5	15.3	5.25	1.4	0.85	4.4	11.5
APKT 1604PDER-CCM	9.5	15.3	5.25	1.4	0.85	4.4	11.5
APHT 1604PDFR-LMM	9.5	15.3	4.65	2	0.85	4.4	11.5
APKT 160416ER-RCM	9.5	15.3	5.25	0.65	1.6	4.4	11.5
APKT 160424ER-RCM	9.5	15.3	5.25	0.6	2.4	4.4	11.5
APKT 160432ER-RCM	9.5	15.3	5.25	0.3	3.2	4.4	11.5
APKT 160440ER-RCM	9.5	15.3	5.25	0.3	4.0	4.4	11.5
APKT 160448ER-RCM	9.5	15.3	5.8	0.3	4.8	4.4	11.5

SSM-A / Shouldering 2 x 90°

Milling body (APKT16)

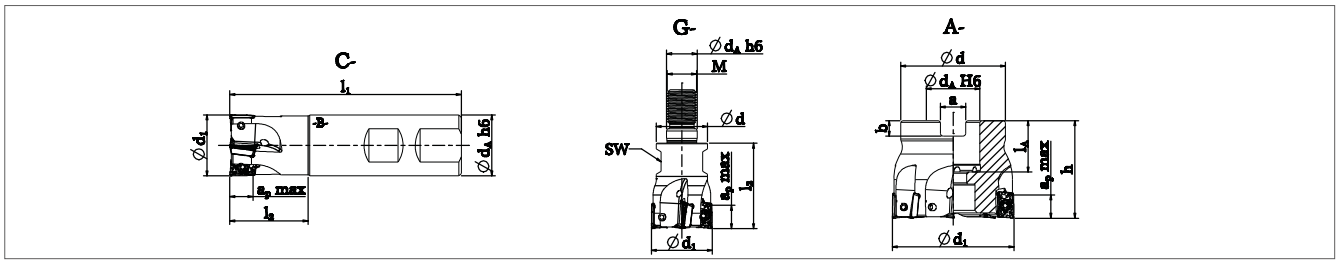

Descirption	Ø d_1 [mm]	l_1 [mm]	l_2 [mm]	h [mm]	Ø d_A H6/h6 [mm]	a_p max [mm]	n_{max} [min-1]	z	Ø d [mm]	SW	M	l_A [mm]	a [mm]	b [mm]
C-SSM-UA16-25.R.02-B-40-95	25	95	40	-	25	15.3	26560	2	-	-	-	-	-	-
C-SSM-UA16-32.R.03-B-40-105	32	105	40	-	32	15.3	24160	3	-	-	-	-	-	-
C-SSM-UA16-40.R.04-B-50-125	40	125	50	-	40	15.3	22160	4	-	-	-	-	-	-
G-SSM-UA16-25.R.02	25	-	35	-	12.5	15.3	26560	2	21	SW17	M12	-	-	-
G-SSM-UA16-32.R.03	32	-	40	-	17	15.3	20500	3	29	SW24	M15	-	-	-
G-SSM-UA16-40.R.04	40	-	40	-	17	15.3	16400	4	29	SW24	M16	-	-	-
A-SSM-UA16-40.R.04	40	-	-	40	16	15.3	22160	4	38	-	-	20	8.4	5.6
A-SSM-UA16-50.R.05	50	-	-	40	22	15.3	20320	5	43	-	-	21	10.4	6.3
A-SSM-UA16-63.R.06	63	-	-	40	22	15.3	18640	6	48	-	-	21	10.4	6.3
A-SSM-UA16-80.R.07	80	-	-	50	27	15.3	17040	7	0	-	-	23	12.4	7
A-SSM-UA16-80.R.08	80	-	-	50	27	15.3	17040	8	58	-	-	23	12.4	7
A-SSM-UA16-100.R.09	100	-	-	50	32	15.3	15680	9	78	-	-	26	14.4	8
A-SSM-UA16-125.R.09	125	-	-	63	40	15.3	12600	9	0	-	-	28	16.4	9

Modification of cutter bodies

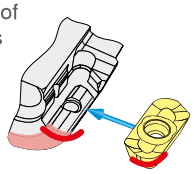

> r 1.6

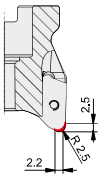
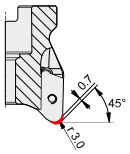
> r 3.0